DIMENSIONI D'INGOMBRO – OVERALL DIMENSIONS – DIMENSIONS D'ENCOMBREMENT RAUMBEDARF – DIMENSIONES TOTALES – DIMENSÕES

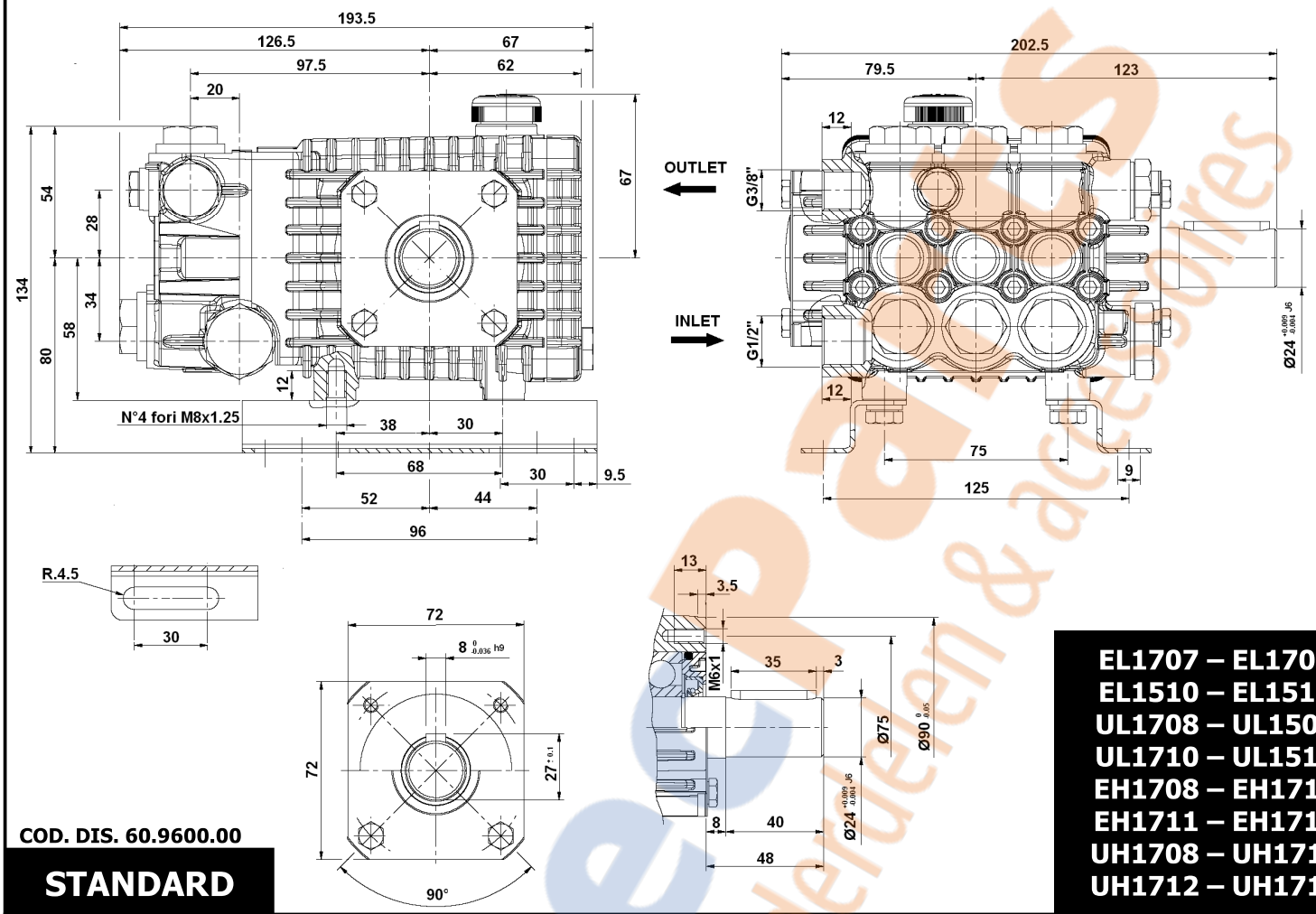

COD. DIS. 60.9600.00

STANDARD

EL1707 – EL1708
EL1510 – EL1513
UL1708 – UL1509
UL1710 – UL1512
EH1708 – EH1710
EH1711 – EH1713
UH1708 – UH1710
UH1712 – UH1713

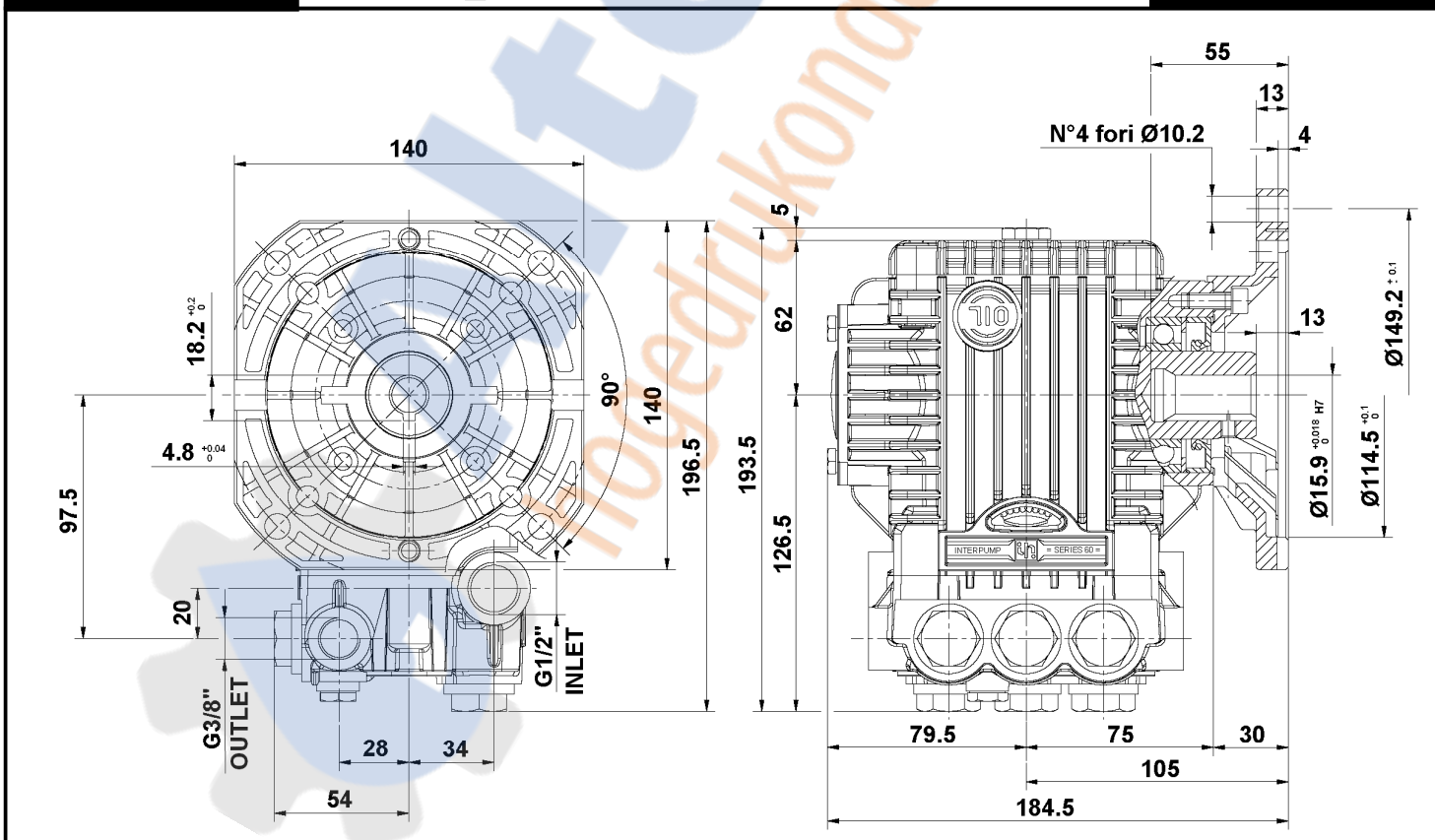

A

COD. DIS. 60.9605.00

UL1708 – UL1509
UL1512 – UH1708
UH1711 – UH1712